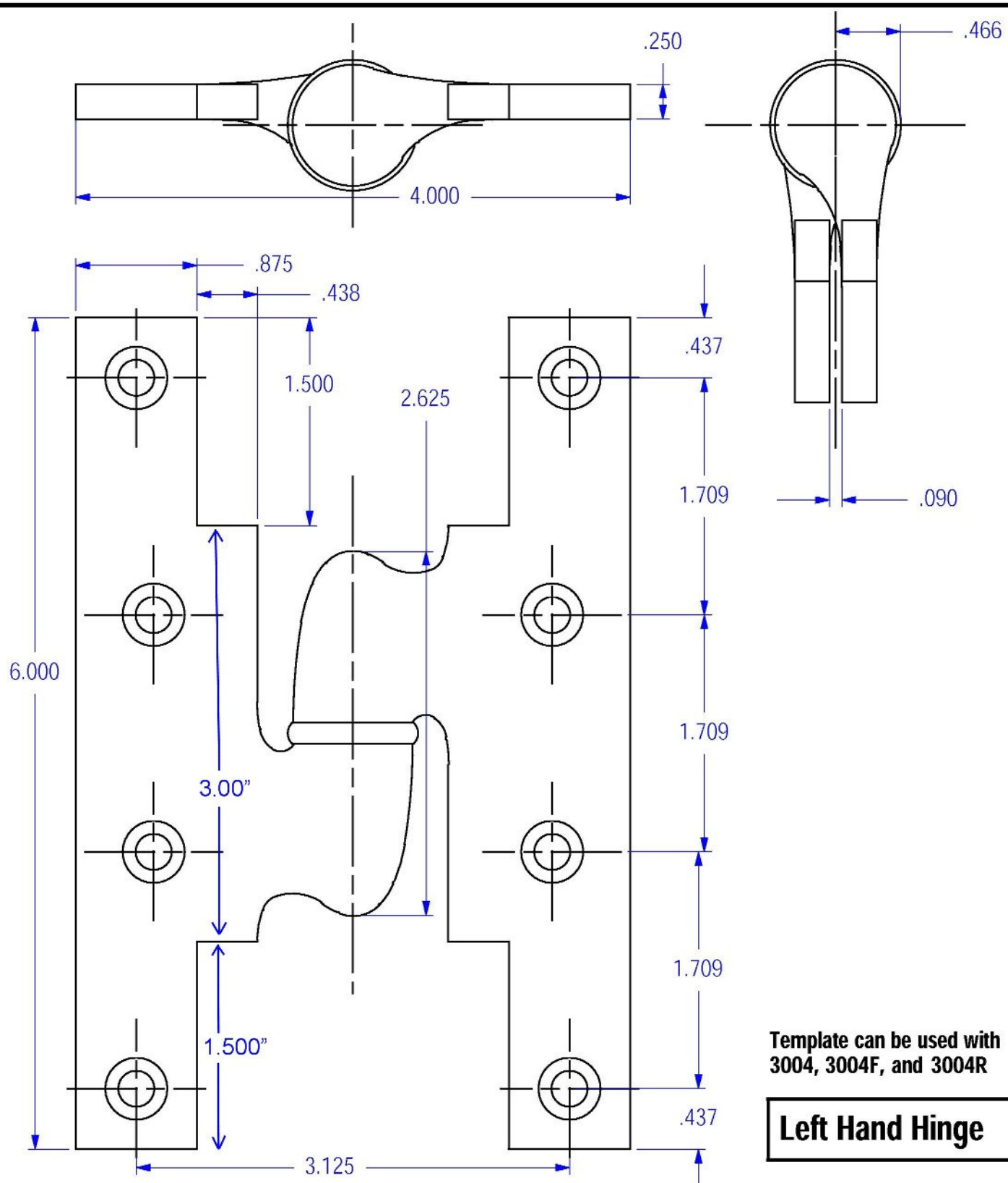

Template can be used with 3004, 3004F, and 3004R

Left Hand Hinge

If any questions about mortising accur please call Nanz at 212 367-7000

****DO NOT SCALE****

NANZ

© Nanz Custom Hardware Inc
20 Vandam St New York NY 10013
212367 7000 Fax 212367 7375

Tolerances unless otherwise specified: Machined features fraction +/- 1/64, Decimal .XXXX +/-.0005, .XXX +/- .005, Angular +/- 1 Degree, Hole Diameter +.003/-.002

Product: 3004 6.0" X 4.0" Olive Knuckle Hinge		Revision: 2
Component: Hinge		File Name: 3004 Cut
CatalogNumber: 3004	Date: 01/19/99	
Scale: 1:1	Drawn By: SB	