Flush Bolt Template FB-605 1” x 6-3/8”

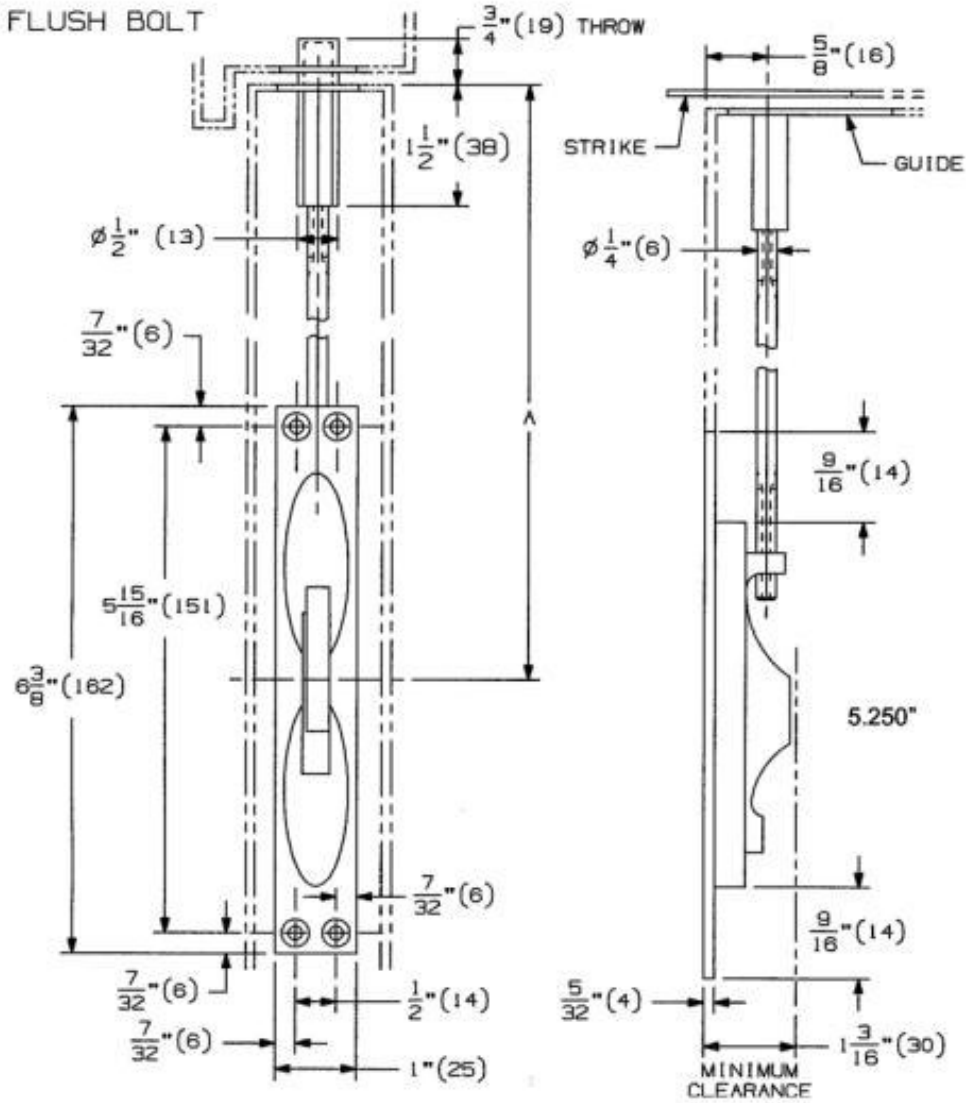

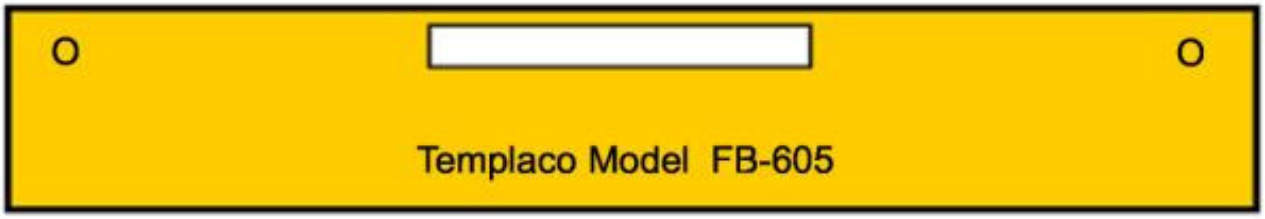

17” +/-

Finish size is 1" x 6-3/8", use a 5/8" router template guide and a 1/2" hinge mortising bit. You will need to square out the corners of the mortise to complete the installation. Templaco Tools, Inc. 6/30/05